DRC

PZ22-12000027

07/02/2025

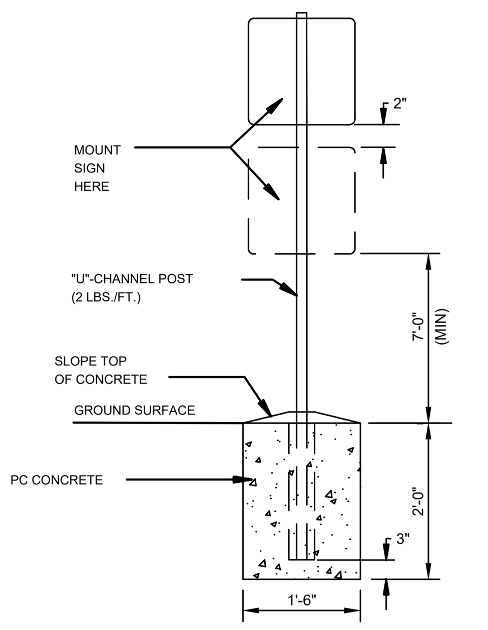

NOTE:
ALL SIGNS SHALL COMPLY WITH U.S. DEPARTMENT OF TRANSPORTATION, FEDERAL HIGHWAY ADMINISTRATION'S "MANUAL ON UNIFORM TRAFFIC CONTROL DEVICES", LOCAL CODES AND AS SPECIFIED. MOUNT SIGNS TO POST IN ACCORDANCE WITH MANUFACTURER'S INSTRUCTIONS.

STANDARD SIGN BASE

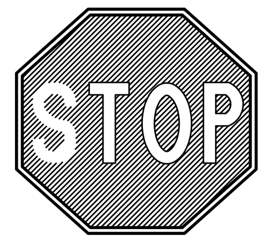

30" x 30" OR
24" X 24" (FOR ON SITE ONLY)
HIGH INTENSITY
R1-1

STOP SIGN

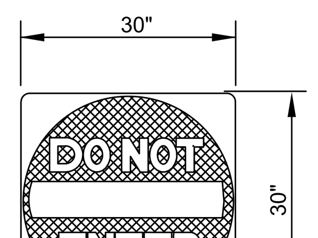

STANDARD RED AND WHITE SIGN
R5-1

"DO NOT ENTER" SIGN

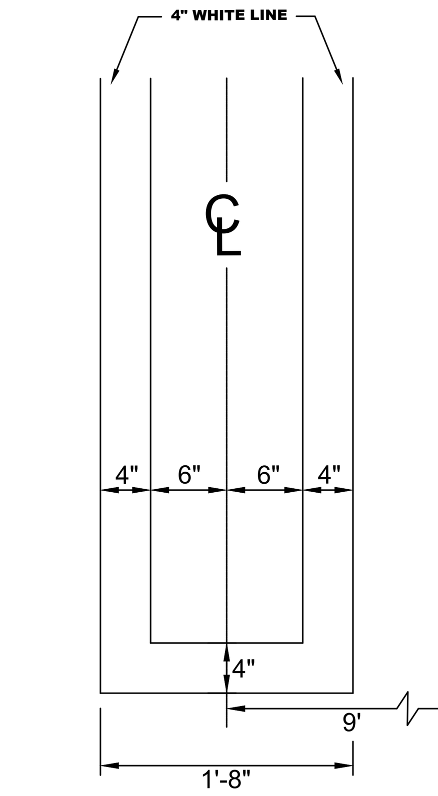

PARKING STRIPE DETAIL

N.T.S.

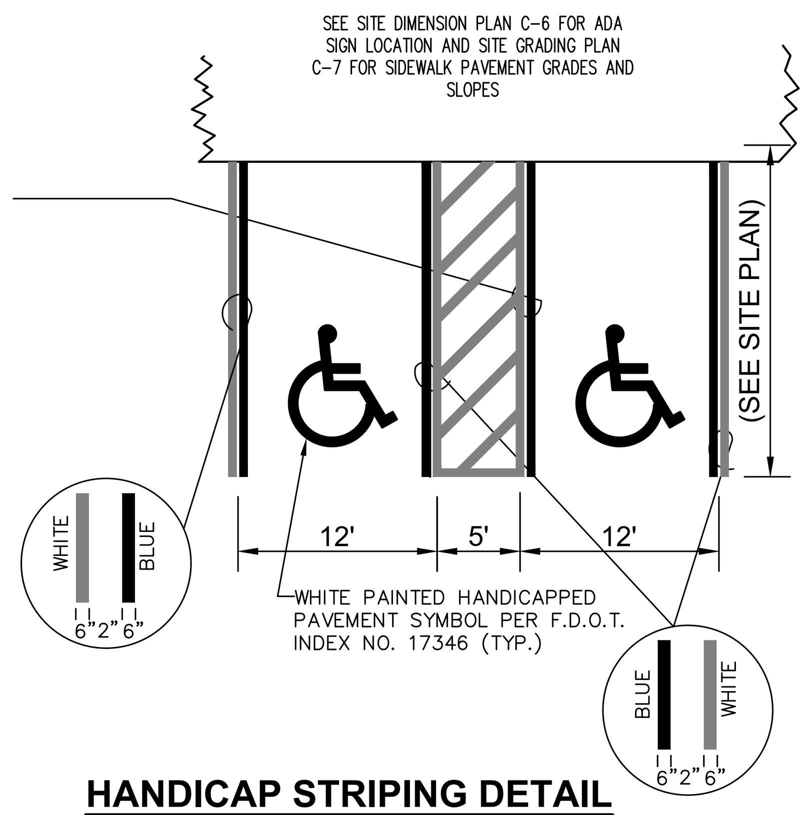

HANDICAP STRIPING DETAIL

N.T.S.

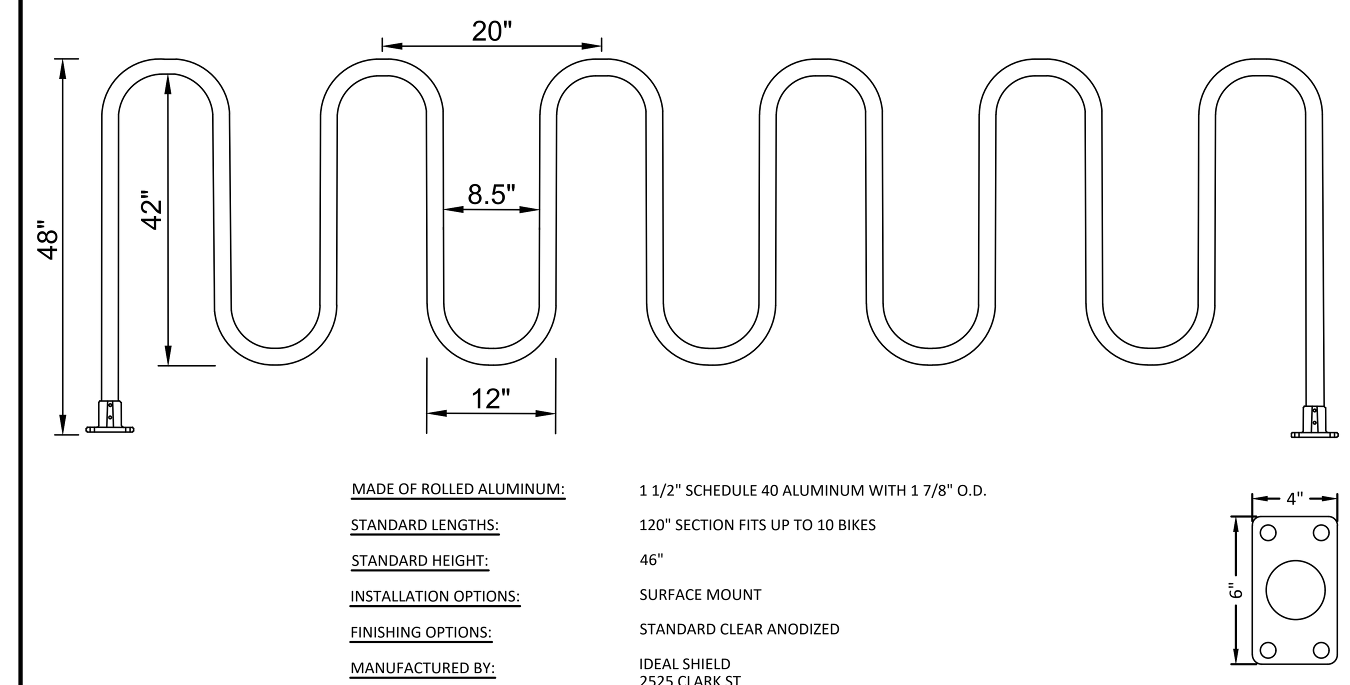

MADE OF ROLLED ALUMINUM:	1 1/2" SCHEDULE 40 ALUMINUM WITH 1 7/8" O.D.
STANDARD LENGTHS:	120" SECTION FITS UP TO 10 BIKES
STANDARD HEIGHT:	46"
INSTALLATION OPTIONS:	SURFACE MOUNT
FINISHING OPTIONS:	STANDARD CLEAR ANODIZED
MANUFACTURED BY:	IDEAL SHIELD 2525 CLARK ST DETROIT, MI 48209 PHONE: 1-866-825-8659

STANDARD (10) BICYCLE RACK DETAIL

N.T.S.

B.C.H.C.E.D. REF. NO. 200617002

NOTE:

ALL SIGNS AND PAVEMENT MARKINGS SHALL BE IN ACCORDANCE WITH THE "MANUAL ON UNIFORM TRAFFIC CONTROL DEVICES" AND THE LATEST IMPLEMENTED EDITION OF FDOT ROADWAY AND TRAFFIC DESIGN STANDARDS AND BROWARD COUNTY TRAFFIC ENGINEERING DIVISION CURRENT STANDARDS.

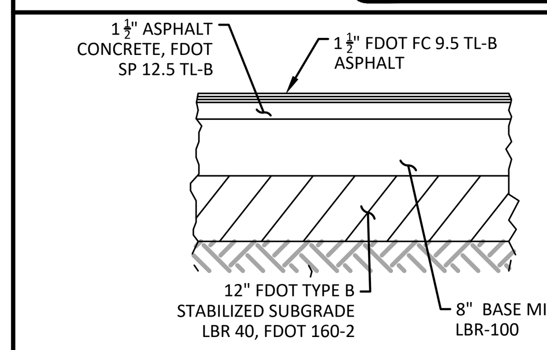

BASE:
1. FDOT SHELL ROCK, BANK RUN SHELL, LIMEROCK, CRUSHED CONCRETE OR CEMENT COQUINA BASE. LBR-100
2. BASE TO MEET LOCAL, FDOT, GEOTECHNICAL REPORT & FDOT SPECIFICATIONS

NOTE: TO BE CONSTRUCTED PER FDOT SPECIFICATIONS (INDEX 330-001)

STANDARD DUTY ASPHALT PAVEMENT TYPICAL CROSS SECTION

N.T.S.

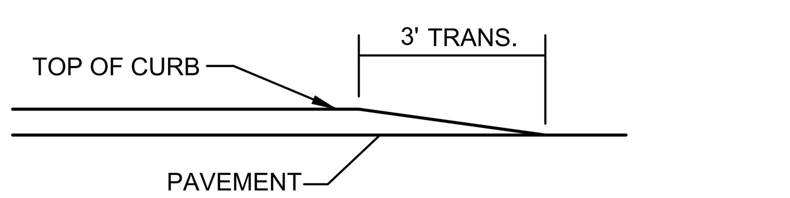

ELEVATION VIEW

3' HORIZONTAL CURB TRANSITION DETAIL

N.T.S.

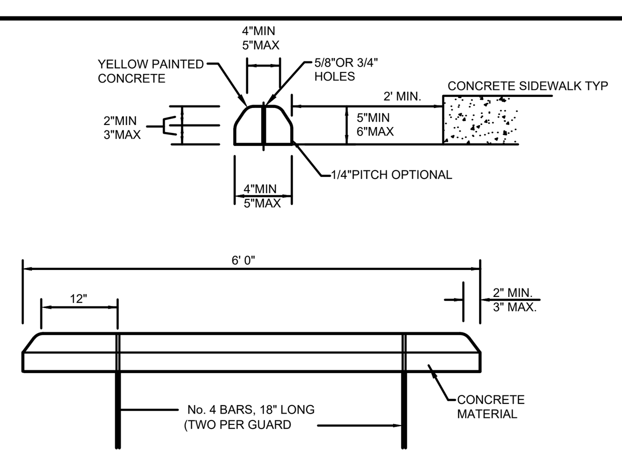

WHEEL STOPS SHALL BE DEPARTMENT OF TRANSPORTATION CLASS "I" CONCRETE, WITH A COMPRESSIVE STRENGTH OF 3,000 PSI.

CONCRETE WHEEL STOP

N.T.S.

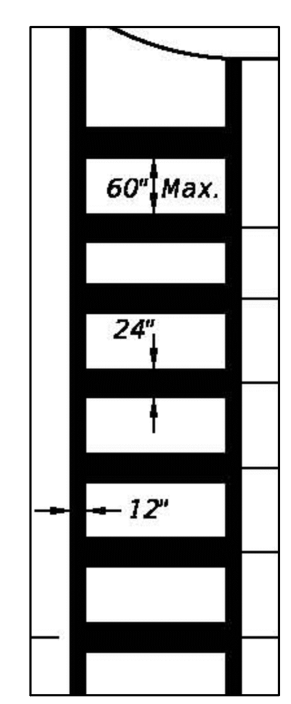

PER FDOT INDEX # 17346 (TYP)

CROSSWALK DETAIL

N.T.S.

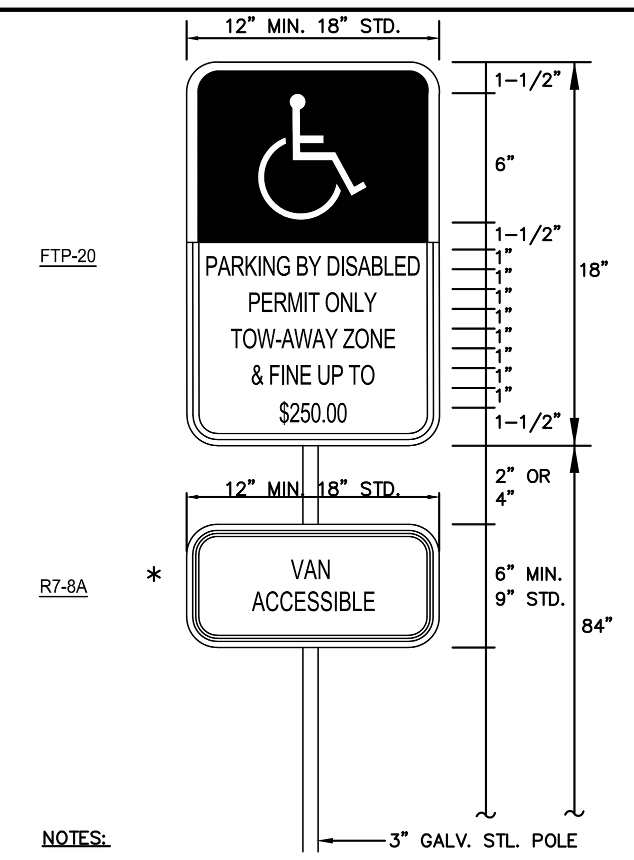

NOTES:

SIGNS FTP-25 AND R7-8A SHALL BE IN ACCORDANCE WITH F.D.O.T. INDEX NO. 17355 AND SHALL MEET THE REQUIREMENTS OF FLORIDA STATUTES 316.1955 AND 316.1956.

* SIGNS "$250.00 FINE" AND "R7-8A" PER LOCAL REQUIREMENTS.

HANDICAP SIGN DETAIL

N.T.S.

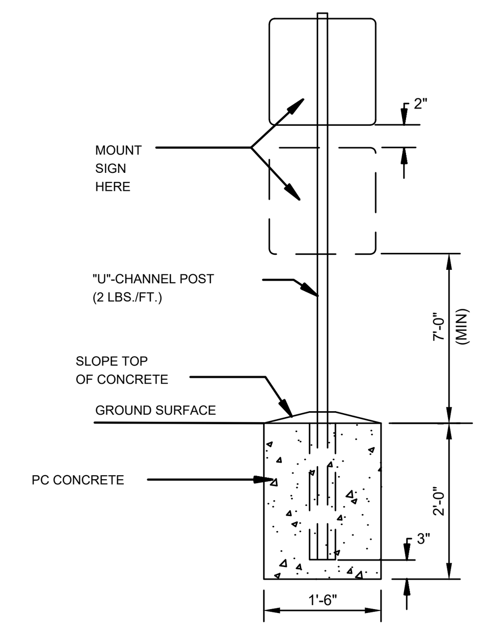

NOTE:
ALL SIGNS SHALL COMPLY WITH U.S. DEPARTMENT OF TRANSPORTATION, FEDERAL HIGHWAY ADMINISTRATION'S "MANUAL ON UNIFORM TRAFFIC CONTROL DEVICES", LOCAL CODES AND AS SPECIFIED. MOUNT SIGNS TO POST IN ACCORDANCE WITH MANUFACTURER'S INSTRUCTIONS.

STANDARD SIGN BASE

N.T.S.

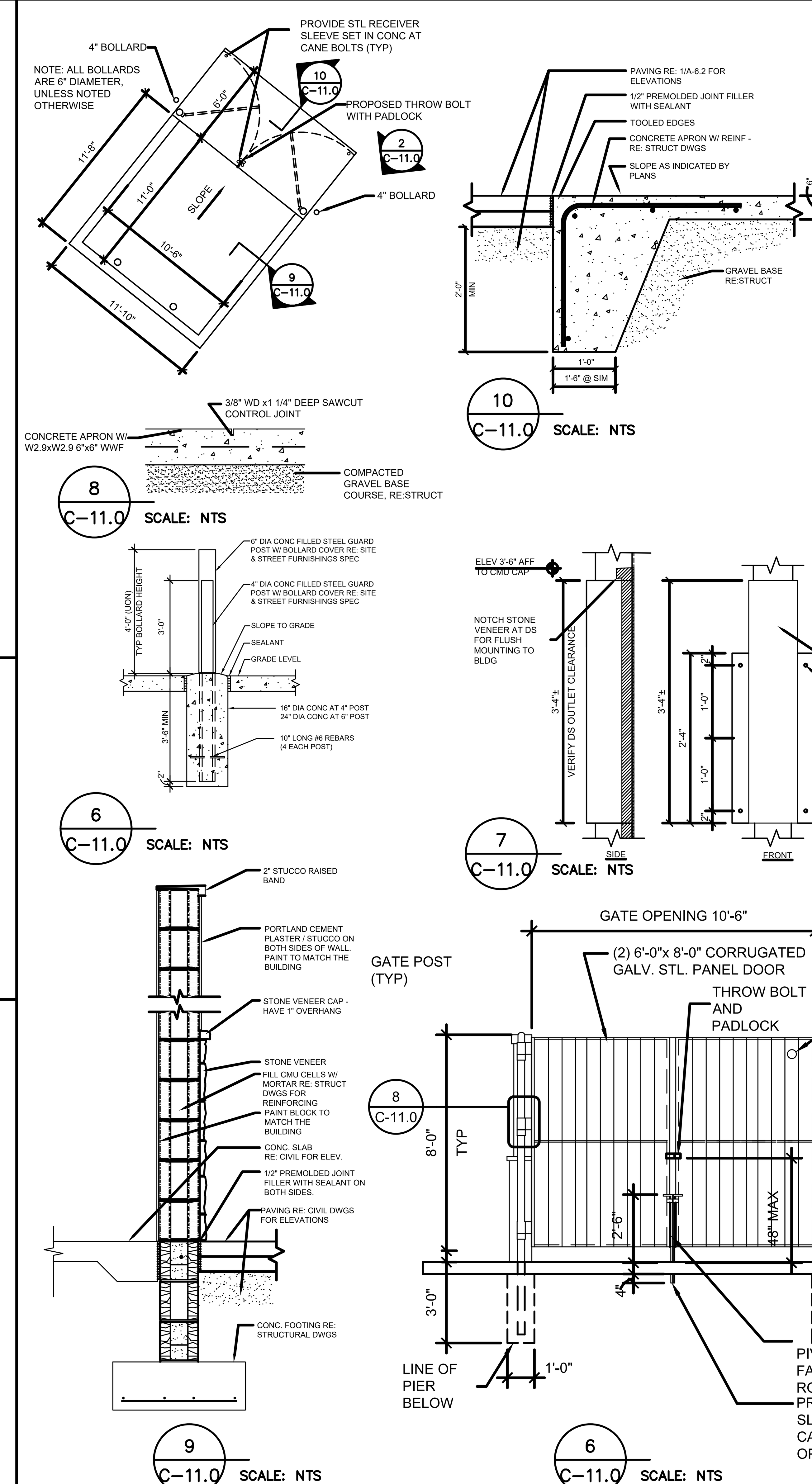

DUMPSTER ENCLOSURE DETAILS

N.T.S.

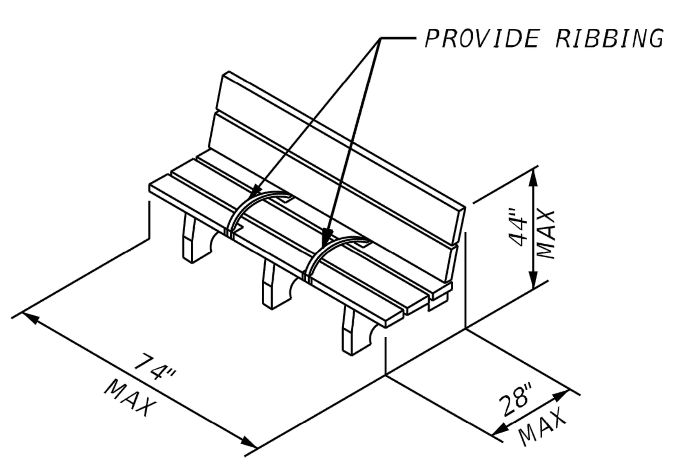

BENCH DETAIL

N.T.S.

PERMIT SET
MUST BE ON JOBSITE AT ALL TIMES DURING CONSTRUCTION

NOTICE
INSPECTION REQUIRED
24 HRS. PRIOR TO COMMENCING ANY WORK IN THE PUBLIC R/W CONTACT THE BROWARD COUNTY HIGHWAY CONSTRUCTION AND ENGINEERING DIVISION AT 954-577-4600 FOR INSPECTION.

NOTE:
APPROVAL OF THIS PLAN DOES NOT CONSTITUTE A PERMIT FOR CONSTRUCTION.

A PERMIT FOR CONSTRUCTION MUST BE OBTAINED FROM THE BROWARD COUNTY HIGHWAY CONSTRUCTION AND ENGINEERING DIVISION PRIOR TO COMMENCING CONSTRUCTION IN THE PUBLIC RIGHT OF WAY.

ALL MATERIALS USED AND INSTALLATIONS WITHIN THE PUBLIC RIGHT OF WAY OR EASEMENTS SHALL BE IN ACCORDANCE WITH BROWARD COUNTY HIGHWAY CONSTRUCTION AND ENGINEERING DIVISION SPECIFICATIONS.

BROWARD COUNTY HIGHWAY CONSTRUCTION AND ENGINEERING DIVISION

☐ PLAN CONSISTENT WITH PLAT REQUIREMENTS

☐ PUBLIC RIGHT OF WAY APPROVAL FOR PAVING, GRADING AND DRAINAGE

BY:____________________DATE:____________

DOES NOT INCLUDE APPROVAL OF PAVEMENT MARKING & SIGNS

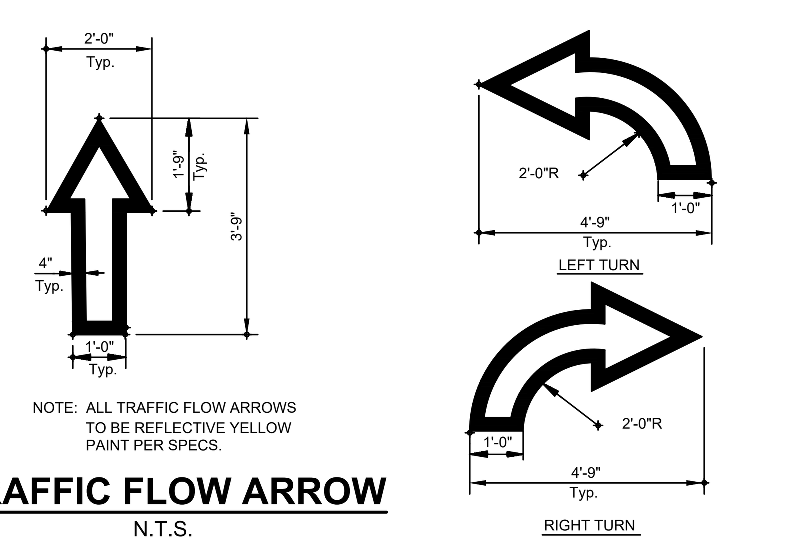

NOTE: ALL TRAFFIC FLOW ARROWS TO BE REFLECTIVE YELLOW PAINT PER SPECS.

TRAFFIC FLOW ARROW

N.T.S.

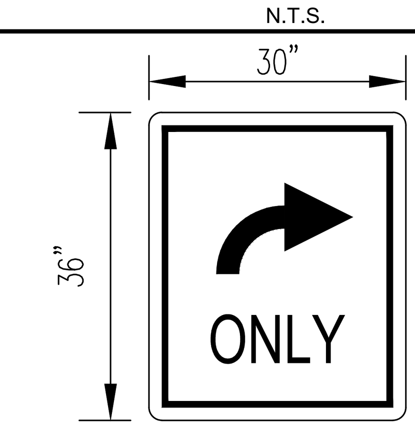

R3-5

BLACK LEGEND ON WHITE BACKGROUND

"RIGHT TURN ONLY" SIGN

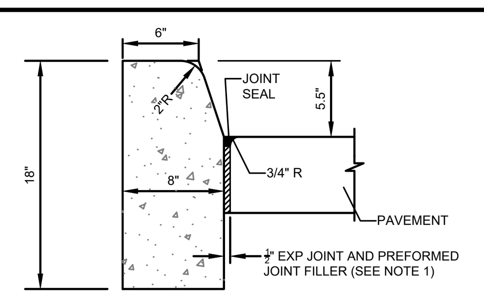

GENERAL NOTES

1. FOR USE ADJACENT TO CONCRETE OR FLEXIBLE PAVEMENT. EXPANSION JOINT, PREFORMED JOINT FILLER AND JOINT SEAL ARE REQUIRED BETWEEN CURBS AND CONCRETE PAVEMENT ONLY.
2. THE CONCRETE FOR CURBS SHALL BE DEPARTMENT OF TRANSPORTATION CLASS "I" CONCRETE, AND HAVE A COMPRESSIVE STRENGTH OF 3000 PSI.
3. ALL CURBS SHALL HAVE CONTRACTION JOINTS AND SHALL BE CONSTRUCTED AT INTERVALS NOT TO EXCEED 10'- 0" ON CENTERS FOR ALL CURBS.

TYPE "D" CURB DETAIL

N.T.S.

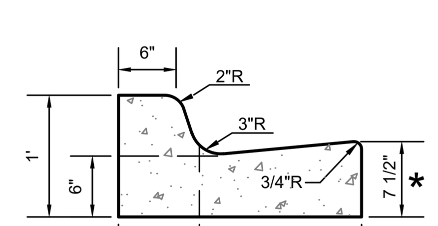

* WHEN USED ON HIGH SIDE OF ROADWAYS, THE CROSS SLOPE OF THE GUTTER SHALL MATCH THE CROSS SLOPE OF THE ADJACENT PAVEMENT. THE THICKNESS OF THE LIP SHALL BE 6", UNLESS OTHERWISE SHOWN ON PLANS.

GENERAL NOTES:
1. THE CONCRETE FOR CURBS SHALL BE DEPARTMENT OF TRANSPORTATION CLASS "I" CONCRETE, AND HAVE A COMPRESSIVE STRENGTH OF 3,000 PSI.
2. ALL CURBS SHALL HAVE CONTRACTION JOINTS AND SHALL BE CONSTRUCTED AT INTERVALS NOT TO EXCEED 10'- 0" ON CENTERS FOR ALL CURBS.

STANDARD CONCRETE CURB & GUTTER

N.T.S.

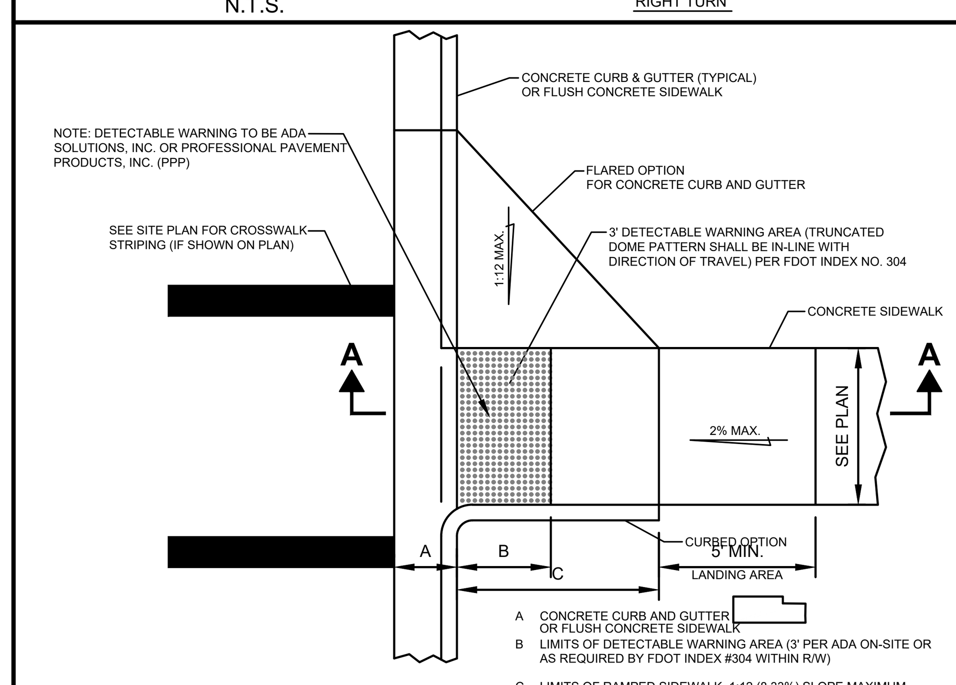

PLAN

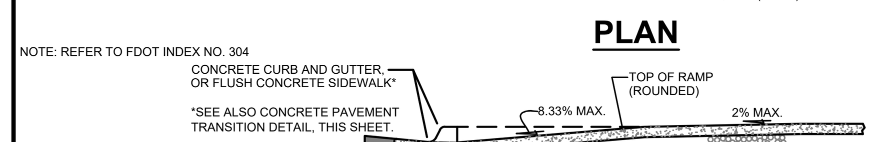

HANDICAP RAMP DETAIL SECTION A-A

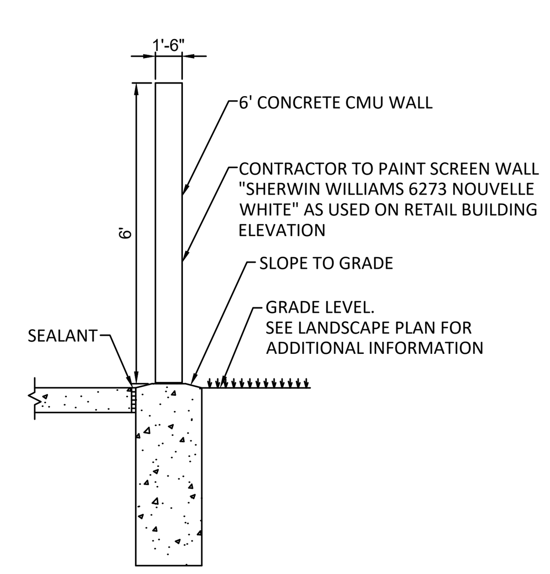

CONCRETE WALL DETAIL

N.T.S.

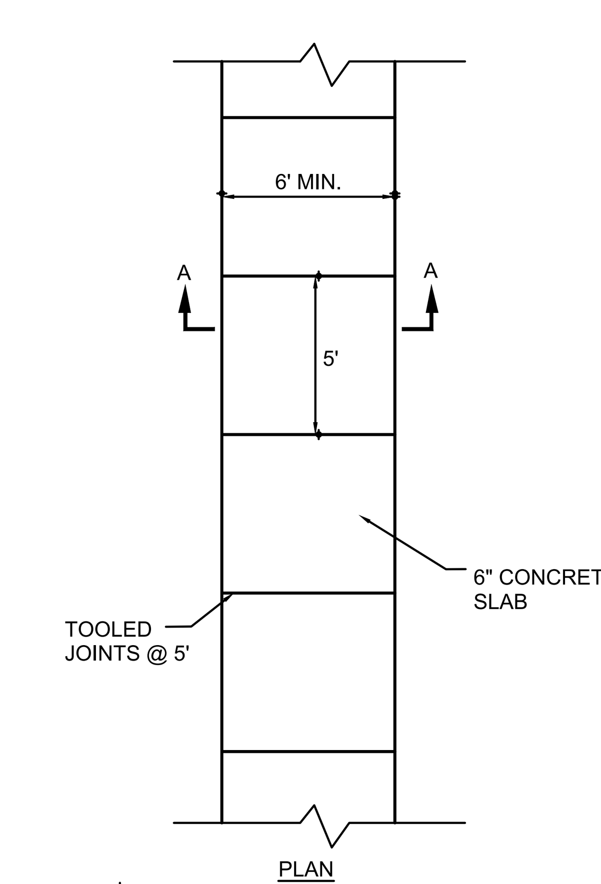

PLAN

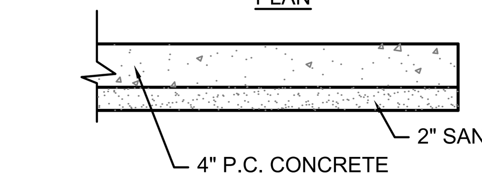

SECTION A-A
MINIMUM 3000 P.S.I. CONCRETE REQUIRED

NOTES:
1. 3/4"x4" PREMOLDED EXPANSION MATERIALS AROUND P.P. OR OTHER STRUCTURES IN WALK.
2. EXPANSION JOINTS MAXIMUM DISTANCE = 100', USED 3/4"x4" PREMOLDED EXPANSION MATERIAL.
3. CONTRACTION JOINTS MAXIMUM DISTANCE = 21', SAW CUT 2" DEEP AND FILL WITH HOT POURED SEALER.
4. SAW CUT JOINTS WITHIN 24 HOURS.

CONCRETE SIDEWALK DETAIL

N.T.S.

Sunshine 811
Call 811 or visit sunshine811.com two full business days before digging to have buried facilities located and marked.
Check positive response codes before you dig!

URBN DESIGN

666 N.E. 125th STREET, SUITE 247
NORTH MIAMI, FL 33161
Phone: 305.720.2079
C.O.A. 33221

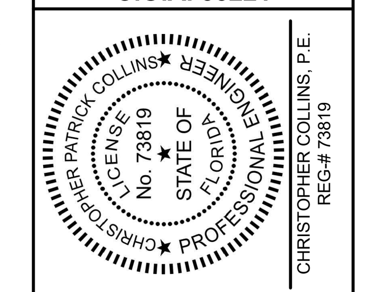

This item has been digitally signed and sealed by Christopher P. Collins, P.E. on the date adjacent to the seal.

Printed copies of this document are not considered signed and sealed and the signature must be verified on any electronics copies.

Christopher Collins — Digitally signed by Christopher Collins Date: 2025.05.28 13:56:20 -04'00'

Revision 6	Date
Comment	
Revision 5	Date
Comment	
Revision 4	Date
Comment	
Revision 3	Date
Comment	
Revision 2	Date
Comment	
Revision 1	Date
Comment	
Designed by:	C.P.C.
Drawn by:	A.T.S.
Checked by:	C.P.C.
Approved by:	C.P.C.
Scale:	N.T.S.
Date:	05/25/2022
Job No.:	I002

© 2025

Plans for

FESTIVAL MARKETPLACE

2900 W SAMPLE ROAD
POMPANO BEACH,
FLORIDA

GENERAL DETAILS

Sheet No.
C-11.0

C:\Users\...\My ShareSync\I002\Civil\DWG\C-11.0 GENERAL DETAILS.dwg 5/23/2025 10:01pm

DRC

PZ22-12000027

10/01/2025